meccanoindex.co.uk

Complete List of Meccano No. 2 Clock Kit Parts

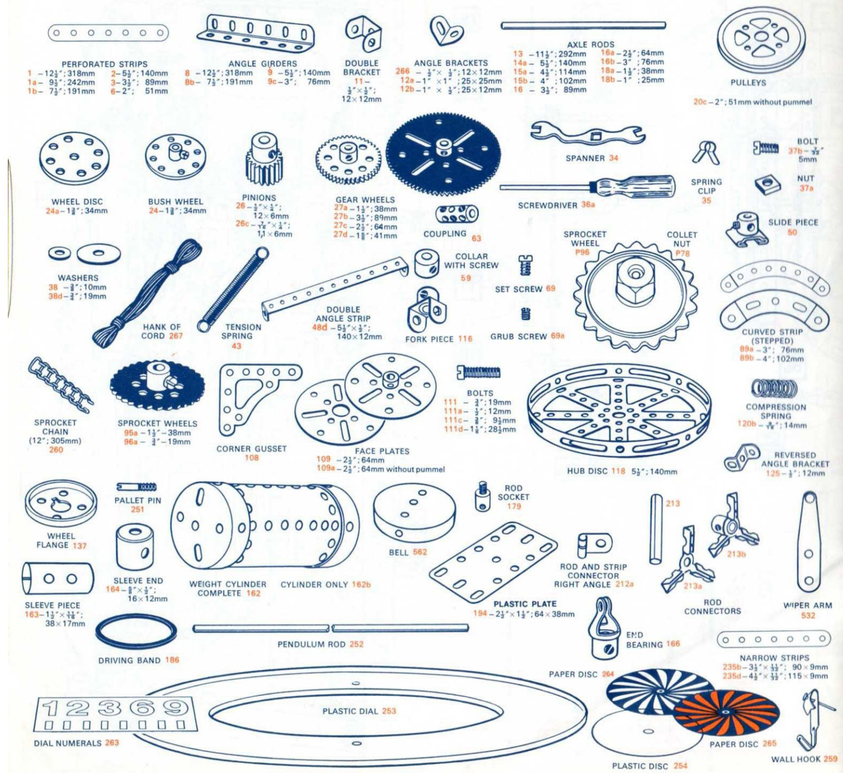

Contents of Meccano No. 2 Clock Kit

Part No.	Description	Quantity
1	Perforated Strip 12½" : 318 mm.	2
1a	,, ,, 9½" : 242 mm.	6
1b	,, ,, 7½" : 191 mm.	5
2	,, ,, 5½" : 140 mm.	4
3	,, ,, 3½" : 89 mm.	3
6	,, ,, 2" : 51 mm.	1
8	Angle Girder 12½" : 318 mm.	1
8b	,, ,, 7½" : 191 mm.	9
9	,, ,, 5½" : 140 mm.	4
9c	,, ,, 3" : 76 mm.	1
11	Double Bracket ½" × ½" : 12 × 12 mm.	2
266	Angle ,, ½" × ½" : 12 × 12 mm.	12
12a	,, ,, 1" × 1" : 25 × 25 mm.	1
12b	,, ,, 1" × ½" : 25 × 12 mm.	1
13	Axle Rod 11½" : 292 mm.	1
14a	,, ,, 5½" : 140 mm.	1
15a	,, ,, 4½" : 114 mm.	3
15b	,, ,, 4" : 102 mm.	1
16	,, ,, 3½" : 89 mm.	8
16a	,, ,, 2½" : 64 mm.	5
16b	,, ,, 3" : 76 mm.	4
18a	,, ,, 1½" : 38 mm.	2
18b	,, ,, 1" : 25 mm.	3
20c	Pulley 2" : 51 mm. dia. without Pummel	2
24	Bush Wheel 1⅜" : 34 mm.	2
24a	Wheel Disc 1⅜" : 34 mm.	9
26	Pinion 19 Teeth ½" × ½" : 12 × 6 mm.	9
26c	,, 15 Teeth 7/16" × ½" : 11 × 6 mm.	2
27a	Gear Wheel 57 Teeth 1½" : 38 mm.	1
27b	,, ,, 133 Teeth 3½" : 89 mm.	1
27c	,, ,, 95 Teeth 2½" : 64 mm.	7
27d	,, ,, 60 Teeth 1⅝" : 41 mm.	2
34	Spanner	1
35	Spring Clip	14
36a	Screwdriver	1
37a	Nut	186
37b	Bolt 7/32" : 5 mm.	136
38	Washer ⅜" : 10 mm.	90
38d	,, ¾" : 19 mm.	4
267	Hank of Cord	2
43	Tension Spring	3
48d	Double Angle Strip 5½" × ½" : 140 × 12 mm.	1
50	Slide Piece	2
59	Collar	18
63	Coupling	1
69	Set Screw	2

Part No.	Description	Quantity
69a	Grub Screw	66
89a	Curved Strip Stepped 3" : 76 mm.	6
89b	Curved Strip Stepped 4" : 102 mm.	2
95a	Sprocket Wheel 1½" : 38 mm.	1
96a	,, ,, ¾" : 19 mm.	1
108	Corner Gusset	2
109	Faceplate 2½" : 64 mm.	3
109a	,, without Pummel 2½" : 64 mm.	2
111	Bolt ¾" : 19 mm.	6
111a	,, ½" : 12 mm.	18
111c	,, ⅜" : 9½ mm.	5
111d	,, 1⅛" : 28½ mm.	1
116	Fork Piece	3
118	Hub Disc 5½" : 140 mm.	2
120b	Compression Spring 7/16" : 14 mm.	1
125	Reversed Angle Bracket ½" : 12 mm.	1
137	Wheel Flange	2
162	Weight Cylinder, Complete	2
162b	Cylinder	1
163	Sleeve Piece 1½" × 11/16" : 38 × 17 mm.	2
164	Chimney Adaptor ⅝" × ½" : 16 × 12 mm.	4
166	End Bearing	4
179	Rod Socket	1
186	Driving Band 2½" : 64 mm.	4
194	Plastic Plate 2½" × 1½" : 64 × 38 mm.	3
212a	Rod & Strip Connector Right Angle	5
213	Rod Connector	3
213a	,, ,, 3-way	1
213b	,, ,, 3-way with Pummel	1
235b	Narrow Strip 3½" × 11/32" : 90 × 9 mm.	1
235d	,, ,, 4½" × 11/32" : 115 × 9 mm.	1
251	Pallet Pin	2
252	Pendulum Rod 9" : 228 mm.	3
253	Clock Dial	1
254	Plastic Disc	1
259	Hook & Nail	1
260	Sprocket Chain 12" : 305 mm.	1
	Bottle of Oil	1
263	Numeral Sheet	1
264	Spiral – Fixed (Self-Adhesive Disc)	1
265	,, Moving (Self-Adhesive Disc)	1
P78	Collet Nut	1
P96	Sprocket Wheel 20 Teeth	1
532	Wiper Arm	1
562	Bell	1
	Instructions Folder	1

Printed in England

© Meccano (1971) Ltd., Binns Road, Liverpool L13 1DA, England

162174

MECCANO®

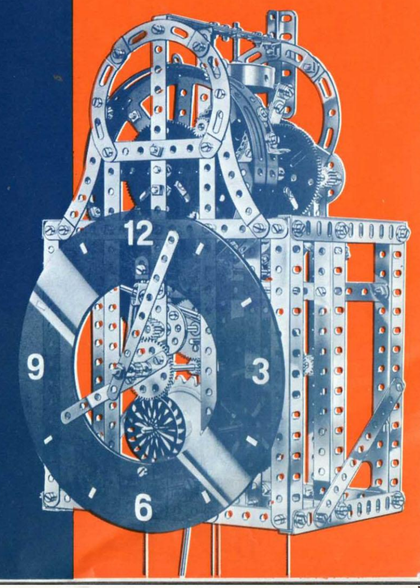

Chiming Clock Assembly
Kit. 2

Method of Assembly

This clock is made up of four functional units, A, B, C & D, as shown on the left. The Part Numbers and the quantity required of each part are shown for each unit and a complete list of parts is given on the right reverse of this Leaflet. Using this complete list, it is advisable to sort out the parts for each unit as you come to it.

Begin construction with the Frame Assembly (diagram A on right). Make the front frame and tighten up. Likewise, make the centre and back frames, then connect these frames by the four side Angle Girders (9) and diagonal Strips (2). Secure together at the top by the Double Angle Strip (48d). Make sure that the whole frame is perfectly square, then **tighten the Nuts and Bolts.**

Later, when the interior mechanisms of the Clock are fitted into the frame, the positions of the axles in the frame can be adjusted slightly, as necessary, by slackening appropriate Bolts in Strips (1a & 1b) and Wheel Discs (24a), and by then moving the axles in the direction indicated by the orange arrows to ensure free-meshing of gears. The black numbers and red-coloured holes in the diagrams identify the location of axles and this guide should be followed when fitting the units in the frame.

Overleaf are shown details of the gear trains. Work methodically through these, treating each numbered sub-assembly as a unit. Select the correct axle ; insert in frame and fit the appropriate parts. Position all parts correctly on the axle, allowing the axle slight end-play.

When you have installed the timing movement it is best to make sure it runs freely and correctly before proceeding further. Fit the driving Cord to the ratchet drive 16a, making 1½ turns around the Pulley (20c). When the Cord is pulled, the mechanism should now run freely with no binding. If any binding occurs, the cause must be traced and rectified. The most probable cause will be out-of-line bearings for one or more of the Rods, causing excessive friction and/or incorrect meshing of gears. Attach the pendulum (24) and weights (19 & 20) ; hang the clock square and adjust the Pallet Pins to give an even beat. (The face should not be fitted for this test).

When you have proved correct operation of the timing mechanism, remove the weights and Cord and put aside until the Clock is finished.

The striking movement should next be assembled in the frame, working methodically through each numbered unit as before. As with the timing movement, the chime should be independently tested for free-running. Fit the ratchet drive (9a) with 1½ turns of Cord around appropriate Pulley (20c) ; hang the clock and attach the weights (17 & 18). The clock hands should be turned until the strike check lever (16) releases the chime wheel (8), when chiming should begin. The minute and hour hands should of course be set on the correct hour to agree with the number of chimes.

It is desirable to lightly oil all bearings.

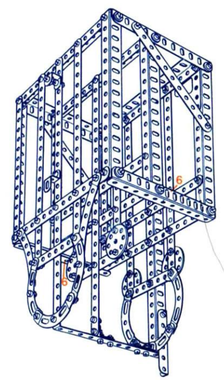

A Frame Assembly

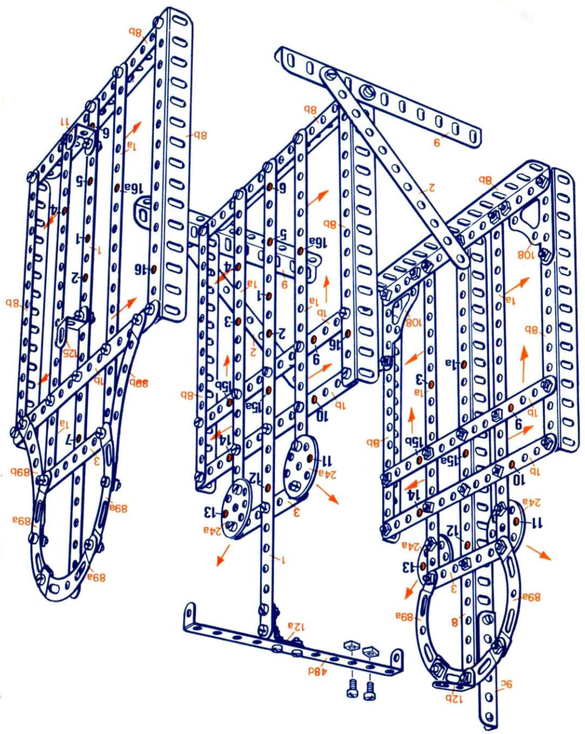

2 – 1	1 – 12b
6 – 1a	4 – 24a
5 – 1b	92 – 37a
2 – 2	92 – 37b
3 – 3	12 – 38
1 – 8	1 – 48d
9 – 8b	6 – 89a
4 – 9	2 – 89b
1 – 9c	2 – 108
1 – 12a	1 – 125

A Frame Parts

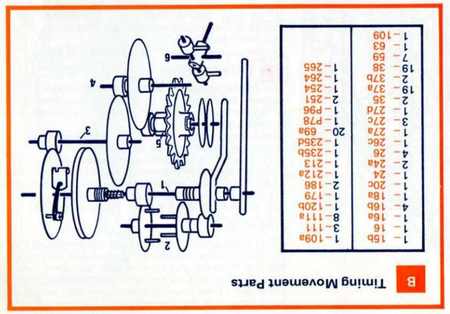

1 – 15b	1 – 109a
1 – 16	3 – 111
1 – 16a	8 – 111a
1 – 18a	1 – 179
4 – 18b	1 – 120b
1 – 20c	2 – 186
1 – 24	1 – 213
2 – 24a	1 – 212a
1 – 26	1 – 235b
4 – 27a	1 – 235b
1 – 26c	1 – 235d
3 – 27c	20 – 69a
1 – 27d	1 – 264
1 – 63	1 – 265
7 – 59	
19 – 37a	
2 – 37b	
1 – 109	

B Timing Movement Parts

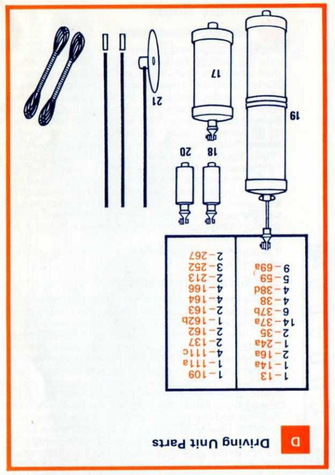

1 – 1	1 – 109
1 – 14a	1 – 111a
2 – 16a	4 – 111c
1 – 24a	2 – 137
2 – 35	2 – 162
14 – 37a	1 – 162b
2 – 38	2 – 213
4 – 38a	4 – 166
6 – 37b	4 – 164
5 – 59	2 – 213
9 – 59a	3 – 252
2 – 267	

D Driving Unit Parts

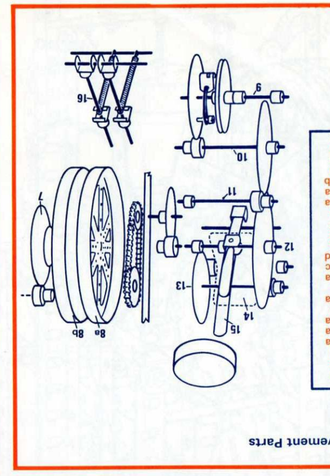

2 – 1	2 – 50
1 – 6	6 – 59
1 – 11	2 – 69
3 – 15a	25 – 69a
1 – 11	2 – 89
7 – 16	1 – 95a
2 – 16a	1 – 96a
3 – 18a	1 – 109
3 – 18b	1 – 109a
1 – 20c	3 – 111
2 – 24a	1 – 111a
1 – 24	8 – 111a
5 – 26	1 – 111d
1 – 26c	2 – 111c
1 – 27b	2 – 118
1 – 27c	3 – 116
4 – 27d	2 – 186
10 – 35	4 – 212a
50 – 37a	3 – 194
28 – 37b	1 – 213a
48 – 38	1 – 213b
3 – 43	12 – 266
	1 – 260
	1 – 562
	1 – 532

C Striking Movement Parts

meccanoindex.co.uk

B Timing Movement

1 – 15b	1 – 109a
1 – 16	3 – 111
1 – 16a	8 – 111a
4 – 16b	1 – 120b
1 – 18a	1 – 179
1 – 20c	2 – 186
1 – 24	1 – 212a
2 – 24a	1 – 213
4 – 26	1 – 235b
1 – 26c	1 – 235d
1 – 27a	20 – 69a
3 – 27c	1 – P78
1 – 27d	1 – P96
2 – 35	2 – 251
21 – 37a	1 – 254
4 – 37b	1 – 264
19 – 38	1 – 265
7 – 59	1 – 253
1 – 63	1 – 263
1 – 109	

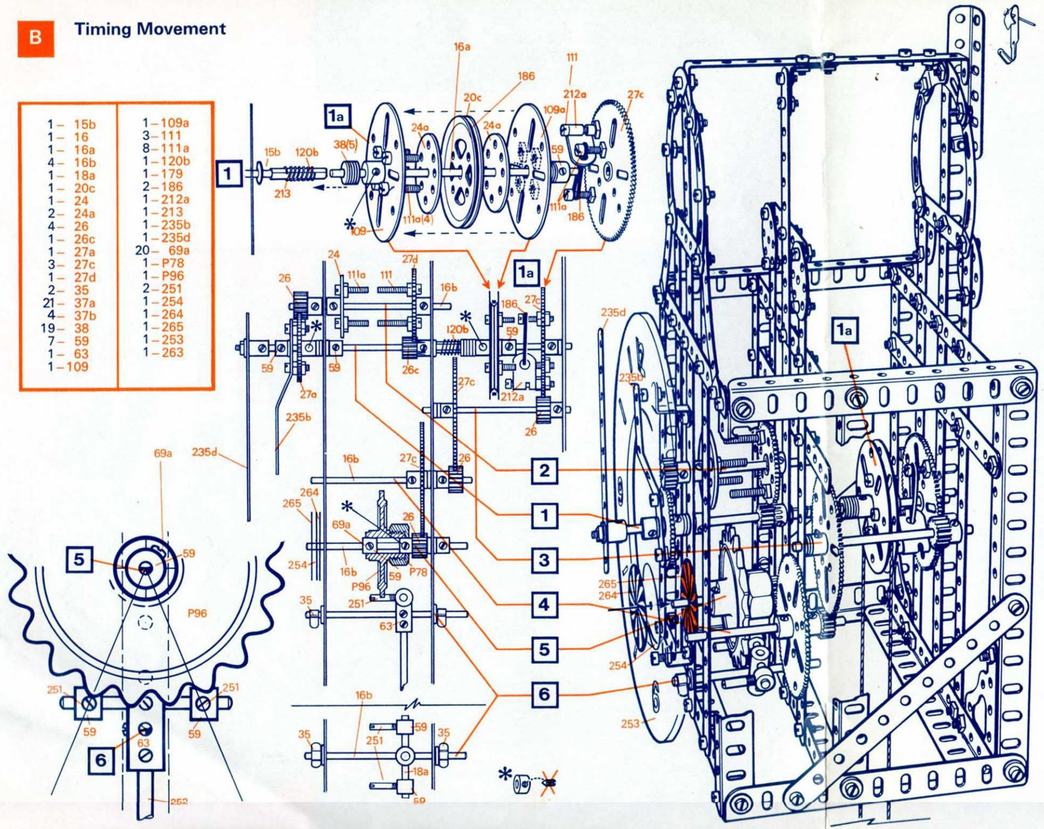

C Striking Movement

Assemble the two halves of the chime wheel (units 8a & 8b). Attach the angle brackets (part 266) according to the diagram (below) ; those for 8b are in full line ; for 8a in broken line. When the chained sprocket and gear assembly is located through right-angled rod connectors (part 212a) it should run quite freely.

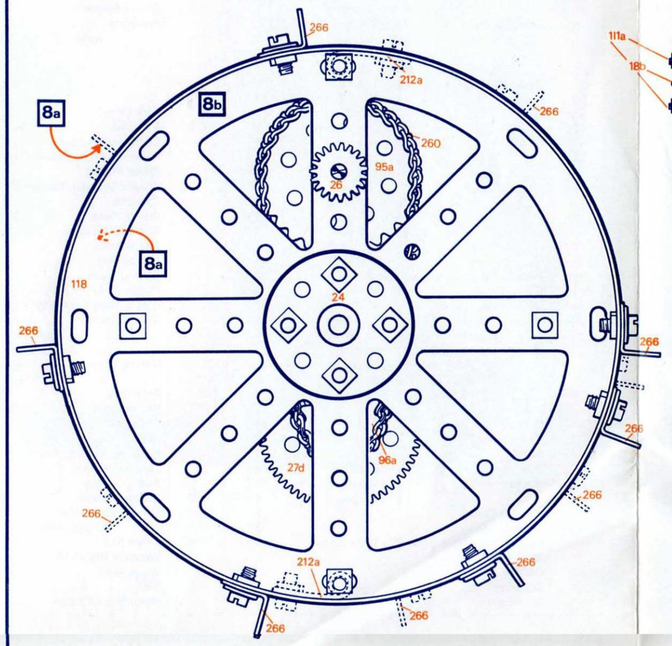

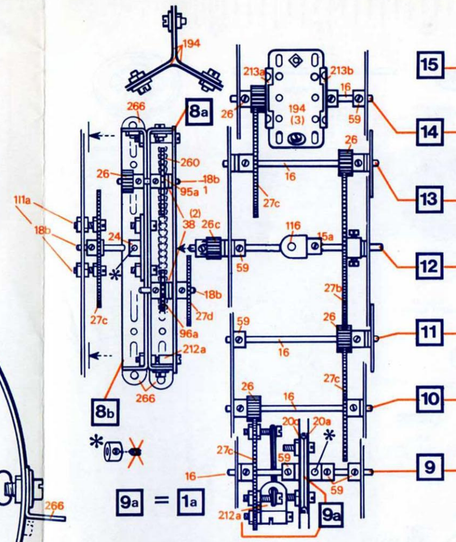

2 – 2	4 – 27c	3 – 111
1 – 6	1 – 27d	8 – 111a
1 – 11	10 – 35	1 – 111c
3 – 15a	50 – 37a	1 – 111d
7 – 16	28 – 37b	3 – 116
2 – 16a	48 – 38	2 – 118
1 – 18a	3 – 43	2 – 186
3 – 18b	2 – 50	3 – 194
1 – 20c	6 – 59	4 – 212a
1 – 24	2 – 69	1 – 213a
2 – 24a	25 – 69a	1 – 213b
5 – 26	1 – 95a	1 – 260
1 – 26c	1 – 96a	12 – 266
1 – 27b	1 – 109	1 – 562
	1 – 109a	1 – 532

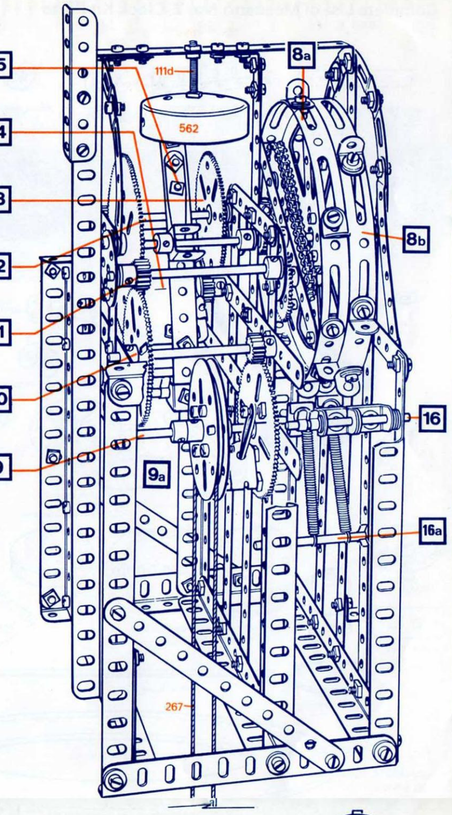

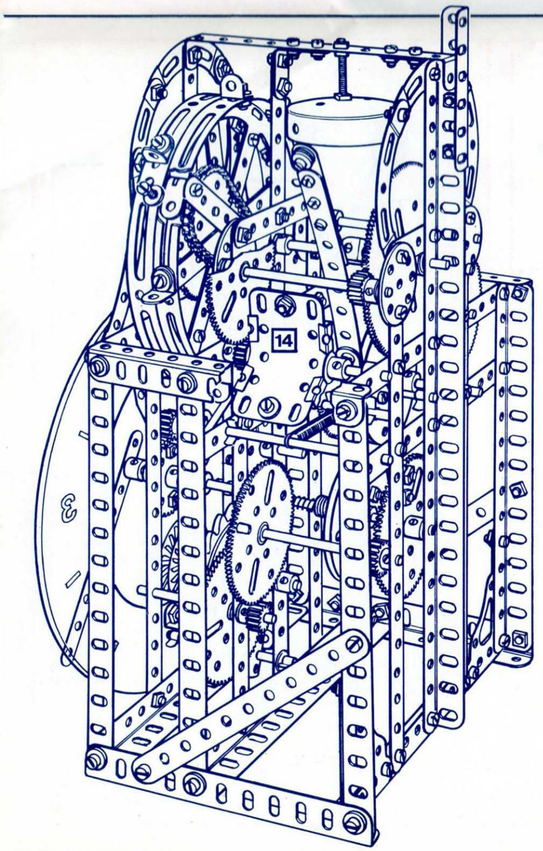

Assembly notes

B Timing movement

Begin by fitting axle 1 with the parts indicated, then insert axle 1a through back Girder(8). Fit indicated parts to this axle, then insert into Rod Connector(213). It is important to fit part(186)to (20c)at the start of assembly of the driving pulley, using an axle to align the pulley assemblies. Part(212a)must pivot freely on Bolt(111). Now fit axle 2 ; setting the cam Bolts in part(24)at 90° to the Bolts in part(27d,)then next add the appropriate parts to axles 3 to 6 working through the axles in numerical order. Insert and secure Pinion(26)within the collet of escapement Sprocket Wheel (P96), tightening the Collet Nut (P78) before fitting to axle 5. Fit the escapement pallet to axle 6, setting the Pallet Pins (251) parallel to the axle. The Pallet Pin centres should be approx. 1 in. (26 mm.) apart and equally spaced from the centre Coupling (63). Each swing of the pendulum should release one tooth of the escapement wheel (P96) and the bottom end of the pendulum should swing through an arc of between 3 and 4 ins. (77-103 mm.).
It is important that Grub Screws are omitted where indicated with an asterisk (*).

C Striking movement.

First fix the stationary gear unit 7 to the frame, aligning the holes with an axle, then bolt Bush Wheel (24) to the chime wheels 8a & 8b, again making sure that the holes are in line.
The chime wheel unit 8 requires precise positioning of the Angle Brackets (266). Lay the wheels over the diagram and secure each one accurately in its place. Now fit the Rod and Strip Connectors (212a) in the correct position on the inner wheel so that the cylindrical portion of each Connector is in line with the centre of the appropriate slot in the wheel. Add Sprocket Wheels (95a)&(96a)to Rods(18b); position the Rods in the chime wheel, fit Washers and then secure Strip(2)in place, using Bolts (111.) Fit Sprocket Chain (260), Gear (27d) and Pinion (26).
Now insert another axle (18b) through assembly 7 ; fit a Washer, then push the axle into the centre of the chime wheel. From the rear, then fit the parts indicated to axle 12 and mount the axle in position, noting that it must extend into the Strip (2) attached to the chime wheel. Assemble the strike check levers and fit axles 16 & 16a , then build assembly 15 and fit axles 15a, 15b & Bell(562).The striking hammer arm should be curved so that the hammer clears the Bell by $\frac{1}{16}$".
Fix the appropriate parts to the remaining axles.

D Driving units

The driving weight for unit 17 should weigh $2\frac{1}{4}$ lbs. when properly loaded with 4" oval nails as illustrated, but other ballasts of comparable weight may be used. The driving weight for unit 19 should weigh $4\frac{1}{2}$ lbs.
These weights are sufficient to drive a freely-running clock, but additional weight may be required to overcome any increased friction resulting from inaccurate assembly of the Clock.
The driving cord arrangements should follow the diagram (extreme right). The optical adhesive discs (264 & 265) are mounted with the coloured disc (264) fixed to the frame and the transparent disc (265) fixed to the circular plastic disc (254).

Regulation

Hang the assembled clock and fit the pendulum and weight. Set the clock square, then start the pendulum swinging and listen for the tick. It should give an even beat but, if not, move the bottom of the clock slightly to left or right until the beat becomes even. If the clock gains time, lower the pendulum bob weight 21 and, if it loses time, raise the bob weight.

Finally the numbers should then be fixed to the clock face and the face bolted to the frame brackets (125) and (11).

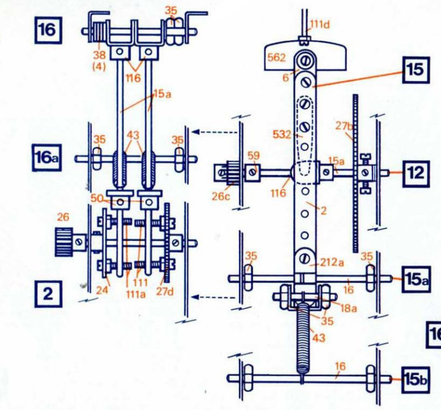

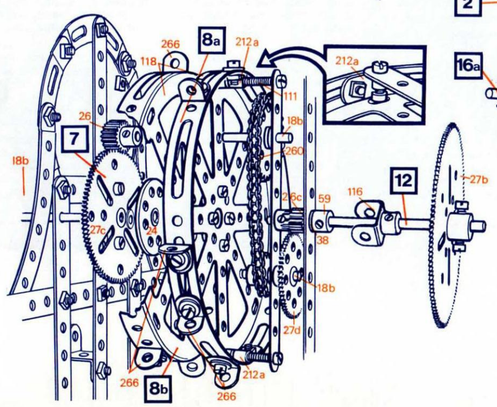

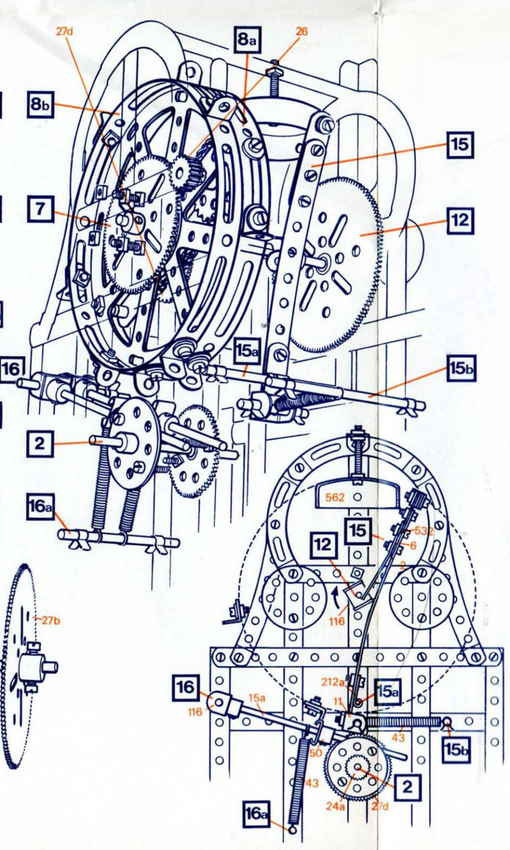

D Driving units
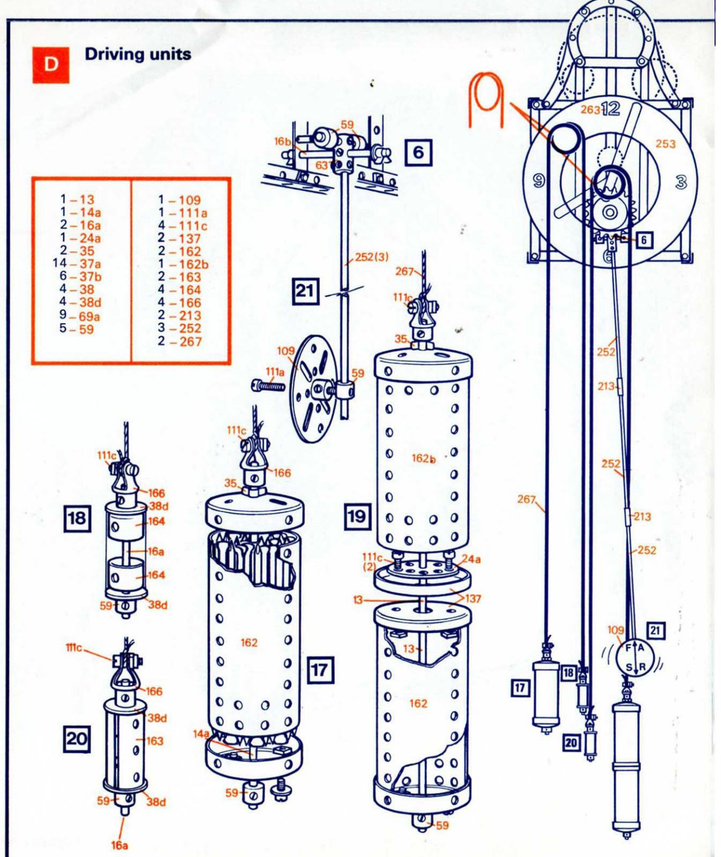
1 – 13	1 – 109
1 – 14a	1 – 111a
2 – 16a	4 – 111c
1 – 24a	2 – 137
2 – 35	2 – 162
14 – 37a	1 – 162b
6 – 37b	2 – 163
4 – 38	4 – 164
4 – 38d	4 – 166
9 – 69a	2 – 213
5 – 59	3 – 252
	2 – 267